P100 Pump Series

Pump Specifications

Hydraulic Configuration	Simplex
Flow Control	Electronic variable speed drive
Steady State Accuracy	± 1.0%
Max Discharge Pressure	
Metallic Head:	1500 PSI (104 bar)
Non-Metallic Head:	Polypropylene: 250 PSI (17 bar) Kynar: 350 PSI (24 bar)
Max Inlet Pressure	250 PSI (17 bar)
Max Temperature	
Metallic Heads:	250°F (121°C)
Non-Metallic Heads:	140°F (60°C)
Inlet Port	1/2 inch NPT, BSPT
Discharge Port	3/8 inch NPT, BSPT
Weight (less motor)	
Metallic Head:	18.5 lbs (8.4 kg)
Non-Metallic Head:	16.4 lbs (7.4 kg)

Maximum Capacity* (Gallons per Hour)

			Metallic and Non-Metallic Head		Metallic Head Only		
Motor RPM	**Gear Ratio**	**Pump RPM**	**100 PSI (7 bar)**	**250 PSI (17 bar)**	**500 PSI (35 bar)**	**1000 PSI (70 bar)**	**1500 PSI (104 bar)**
1800	100:1	18	0.65	0.58	0.50	0.32	**
	80:1	22.5	0.80	0.70	0.60	0.45	**
	60:1	30	1.10	0.98	0.85	0.72	**
	50:1	36	1.30	1.18	1.05	0.89	**
	40:1	45	1.70	1.58	1.45	1.26	0.35
	30:1	60	2.20	2.08	1.95	1.73	1.00
	25:1	72	2.60	2.48	2.35	2.07	1.35
	20:1	90	3.25	3.13	3.00	2.66	1.95
	15:1	120	4.40	4.25	4.10	3.70	2.90
	10:1	180	6.60	6.45	6.30	5.80	5.00
	7.5:1	240	8.70	8.55	8.40	7.80	7.00
	5:1	360	13.20	13.00	12.80	12.00	11.00
3600	7.5:1	480	17.50	17.25	17.00	16.10	15.00
	5:1	720	26.50	26.00	25.50	24.30	23.00

* *Capacity data for pumps with elastomeric diaphragms. Consult factory for performance characteristics of pumps with PTFE diaphragms.*

** *Consult factory for performance specifications.*

Required Motor HP
1/4
1/2
3/4

WANNER ENGINEERING INC

For more information, visit our Website at: www.epmpump.com

P100 Pump Dimensions

Models with Metallic Pumping Head

Inches
(mm)

316 Stainless Steel
Hastelloy® C

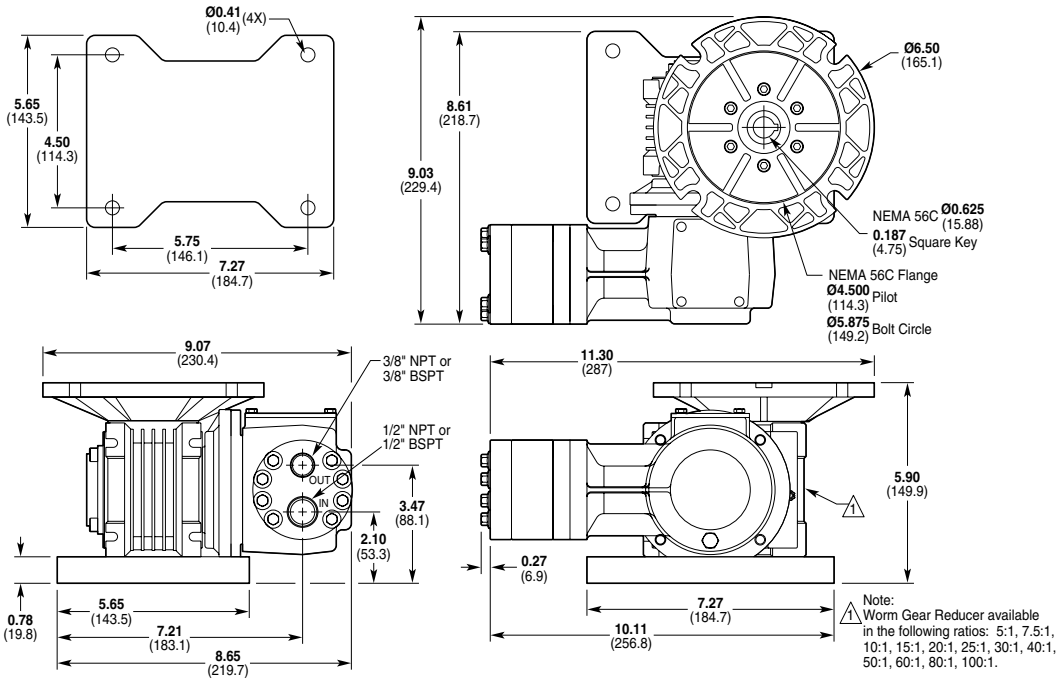

Models with Non-Metallic Pump Head

Kynar
Polypropylene

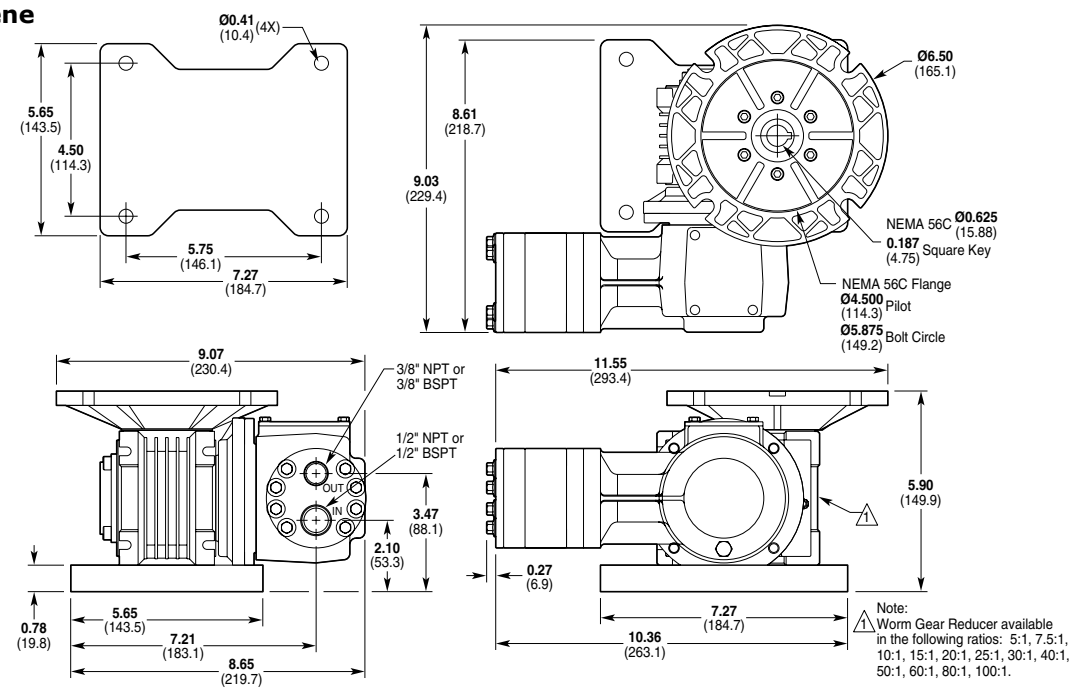

EPM™
ELECTRONIC PRECISION METERING

P200 Pump Series

Pump Specifications

Hydraulic Configuration	Triplex
Flow Control	Electronic variable speed drive
Steady State Accuracy	± 1.0%
Max Discharge Pressure	
Metallic Head:	1000 PSI (70 bar)
Non-Metallic Head:	Polypropylene: 250 PSI (17 bar) Kynar: 350 PSI (24 bar)
Max Inlet Pressure	250 PSI (17 bar)
Max Temperature	
Metallic Heads:	250°F (121°C)
Non-Metallic Heads:	140°F (60°C)
Inlet Port	1/2 inch NPT, BSPT
Discharge Port	3/8 inch NPT, BSPT
Weight (less motor)	
Metallic Head:	39 lbs (17.7 kg)
Non-Metallic Head:	30 lbs (13.6 kg)

Maximum Capacity* (Gallons per Hour)

			Metallic and Non-Metallic Head		Metallic Head Only	
Motor RPM	**Gear Ratio**	**Pump RPM**	**100 PSI (7 bar)**	**250 PSI (17 bar)**	**500 PSI (35 bar)**	**1000 PSI (70 bar)**
1800	100:1	18	1.70	1.60	1.40	0.90
	80:1	22.5	2.25	2.10	1.90	1.35
	60:1	30	3.00	2.80	2.60	2.00
	50:1	36	3.60	3.40	3.15	2.50
	40:1	45	4.75	4.45	4.15	3.40
	30:1	60	6.45	6.15	5.75	4.85
	25:1	72	7.60	7.30	6.90	6.00
	20:1	90	9.70	9.40	8.95	8.00
	15:1	120	13.00	12.70	12.25	11.30
	10:1	180	20.00	19.65	19.10	18.00
	7.5:1	240	26.50	26.10	25.50	24.00
	5:1	360	40.00	39.60	39.00	37.00
3600	7.5:1	480	53.80	53.40	52.80	50.20
	5:1	720	80.80	80.10	79.20	75.50

* *Capacity data for pumps with elastomeric diaphragms. Consult factory for performance characteristics of pumps with PTFE diaphragms.*

Required Motor HP

1/4	3/4
1/2	1

WANNER ENGINEERING INC

For more information, visit our Website at: www.epmpump.com

P200 Pump Dimensions

Models with Metallic Pumping Head

Inches
(mm)

316 Stainless Steel
Hastelloy® C

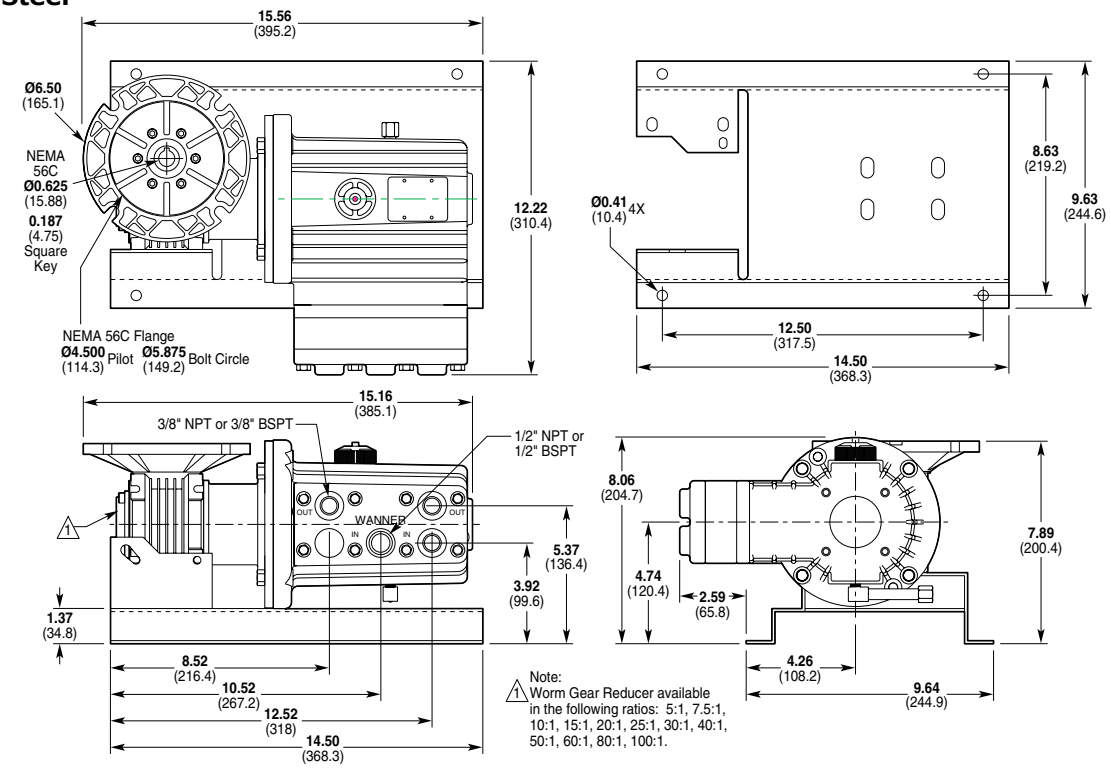

Models with Non-Metallic Pump Head

Kynar
Polypropylene

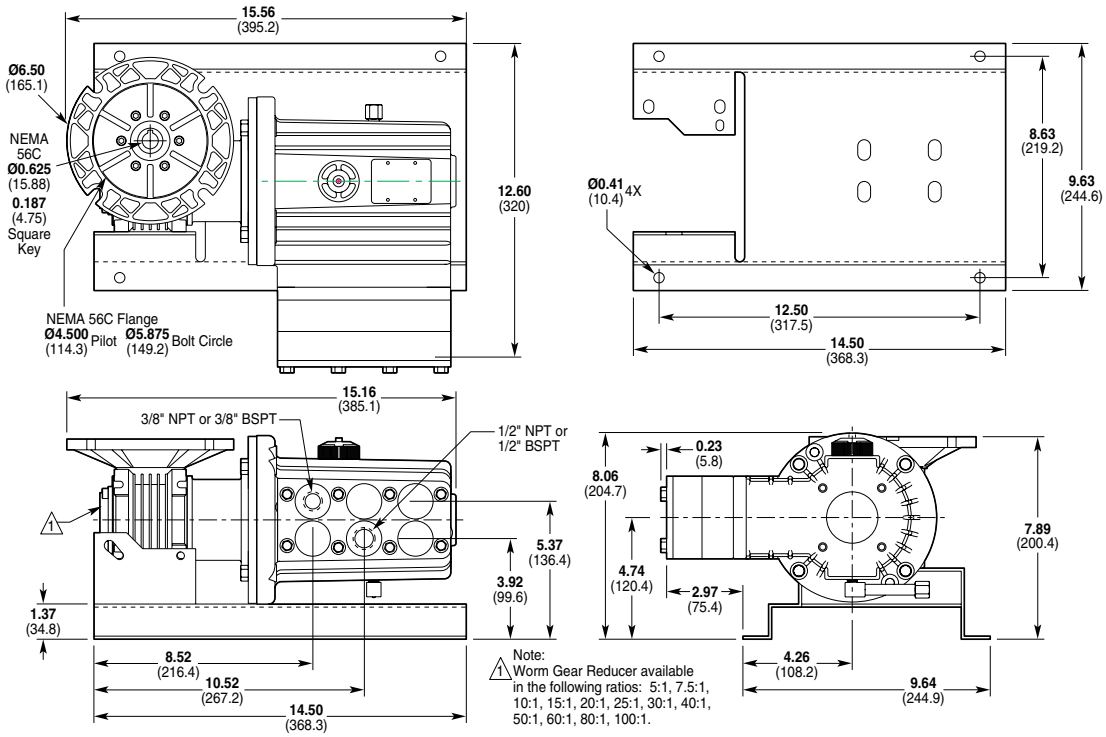

EPM™
ELECTRONIC PRECISION METERING

P300 Pump Series

Pump Specifications

Hydraulic Configuration	Triplex
Flow Control	Electronic variable speed drive
Steady State Accuracy	± 1.0%
Max Discharge Pressure	
Metallic Head:	2500 PSI (173 bar)
Max Inlet Pressure	500 PSI (35 bar)
Max Temperature	250°F (121°C)
Inlet Port	1/2 inch NPT, BSPT
Discharge Port	1/2 inch NPT, BSPT
Weight (less motor)	51 lbs (23.1 kg)

Maximum Capacity (Gallons per Hour)

			Metallic Head Only			
Motor RPM	**Gear Ratio**	**Pump RPM**	**100 PSI (7 bar)**	**500 PSI (35 bar)**	**1500 PSI (104 bar)**	**2500 PSI (173 bar)**
1800	100:1	18	2.00	1.85	1.50	1.15
	80:1	22.5	2.40	2.20	1.75	1.35
	60:1	30	3.35	3.15	2.50	2.10
	50:1	36	3.95	3.75	3.15	2.65
	40:1	45	4.95	4.75	4.20	3.50
	30:1	60	6.65	6.45	5.75	5.05
	25:1	72	7.95	7.75	6.95	6.20
	20:1	90	10.05	9.80	8.80	8.05
	15:1	120	13.30	13.00	11.90	10.80
	10:1	180	20.40	20.00	18.50	17.00
	7.5:1	240	27.05	26.50	24.75	22.90
	5:1	360	41.00	40.25	38.50	35.70
3600	7.5:1	480	55.50	54.50	52.00	48.10
	5:1	720	82.30	80.80	77.00	72.00

Required Motor HP

1/4	3/4	1-1/2	3
1/2	1	2	

WANNER ENGINEERING INC

For more information, visit our Website at: www.epmpump.com

P300 Pump Dimensions

Models with Metallic Pumping Head

Inches
(mm)

304 Stainless Steel
316 Stainless Steel

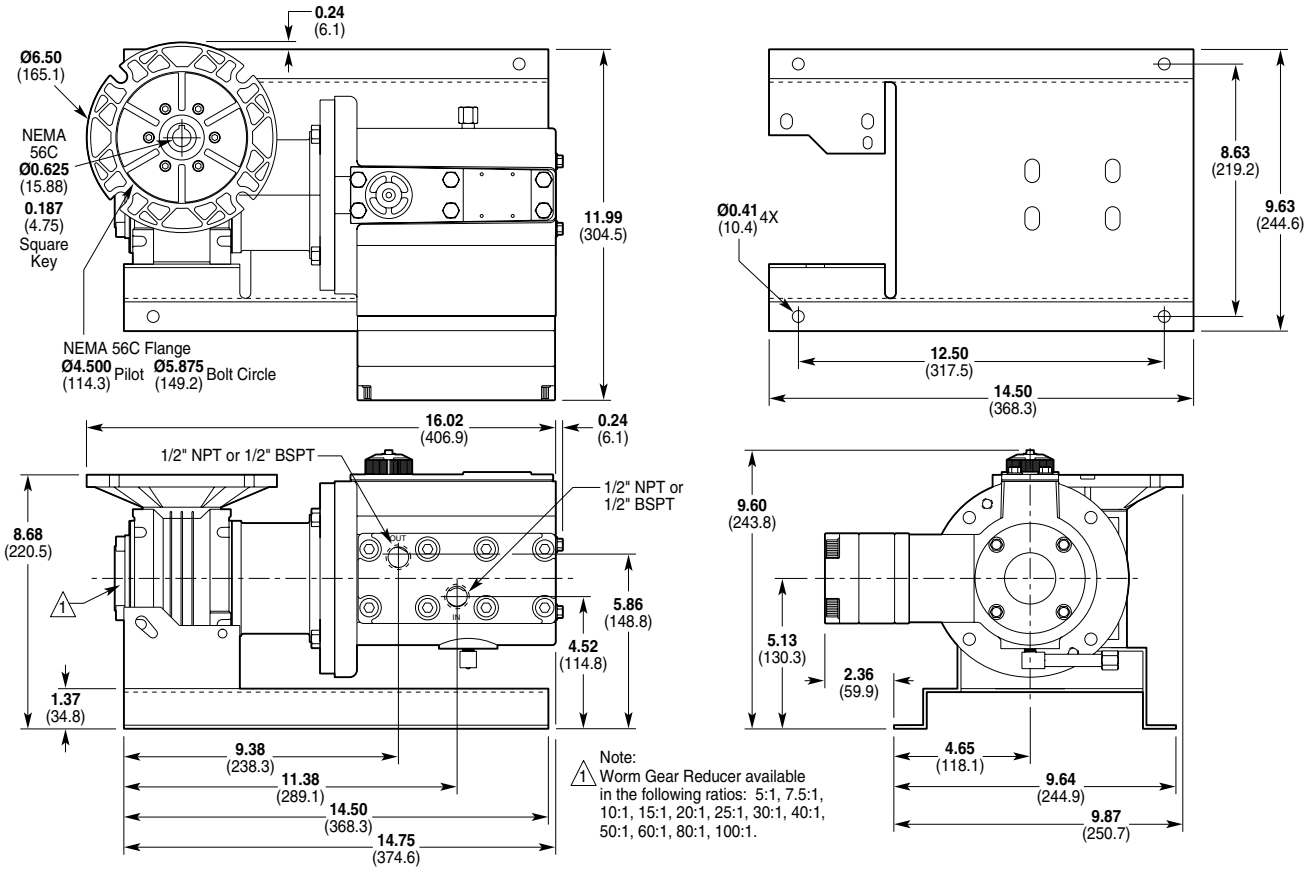

1 Note:
Worm Gear Reducer available in the following ratios: 5:1, 7.5:1, 10:1, 15:1, 20:1, 25:1, 30:1, 40:1, 50:1, 60:1, 80:1, 100:1.

EPM™
ELECTRONIC PRECISION METERING

P400 Pump Series

Pump Specifications

Hydraulic Configuration	Triplex
Flow Control	Electronic variable speed drive
Steady State Accuracy	± 1.0%
Max Discharge Pressure	
Metallic Head:	1000 PSI (70 bar)
Non-Metallic Head:	Polypropylene: 250 PSI (17 bar) Kynar: 350 PSI (24 bar)
Max Inlet Pressure	250 PSI (17 bar)
Max Temperature	
Metallic Heads:	250°F (121°C)
Non-Metallic Heads:	140°F (60°C)
Inlet Port	1 inch NPT, BSPT
Discharge Port	3/4 inch NPT, BSPT
Weight (less motor)	
Metallic Head:	62 lbs (28.1 kg)
Non-Metallic Head:	49 lbs (22.2 kg)

Maximum Capacity* (Gallons per Hour)

			Metallic and Non-Metallic Head		Metallic Head Only	
Motor RPM	**Gear Ratio**	**Pump RPM**	**100 PSI (7 bar)**	**250 PSI (17 bar)**	**500 PSI (35 bar)**	**1000 PSI (70 bar)**
1800	100:1	18	5.45	5.40	5.35	5.20
	80:1	22.5	6.45	6.40	6.35	6.20
	60:1	30	9.15	9.10	9.05	8.90
	50:1	36	11.00	10.95	10.90	10.70
	40:1	45	14.10	14.05	14.00	13.75
	30:1	60	19.90	19.80	19.65	19.05
	25:1	72	24.10	23.90	23.65	22.70
	20:1	90	30.30	30.00	29.60	28.60
	15:1	120	41.0	40.6	40.1	39.0
	10:1	180	60.3	59.9	59.4	58.2
	7.5:1	240	81.0	80.6	80.0	78.5
	5:1	360	121.0	120.5	119.9	118.0
3600	7.5:1	480	162.5	162.0	161.3	158.9
	5:1	720	243.0	242.5	241.5	238.0

* *Capacity data for pumps with elastomeric diaphragms. Consult factory for performance characteristics of pumps with PTFE diaphragms.*

Required Motor HP

1/4	3/4	1-1/2	3
1/2	1	2	

WANNER ENGINEERING INC

For more information, visit our Website at: www.epmpump.com

P400 Pump Dimensions

Models with Metallic Pumping Head

Inches
(mm)

316 Stainless Steel
Cast Iron
Hastelloy® C

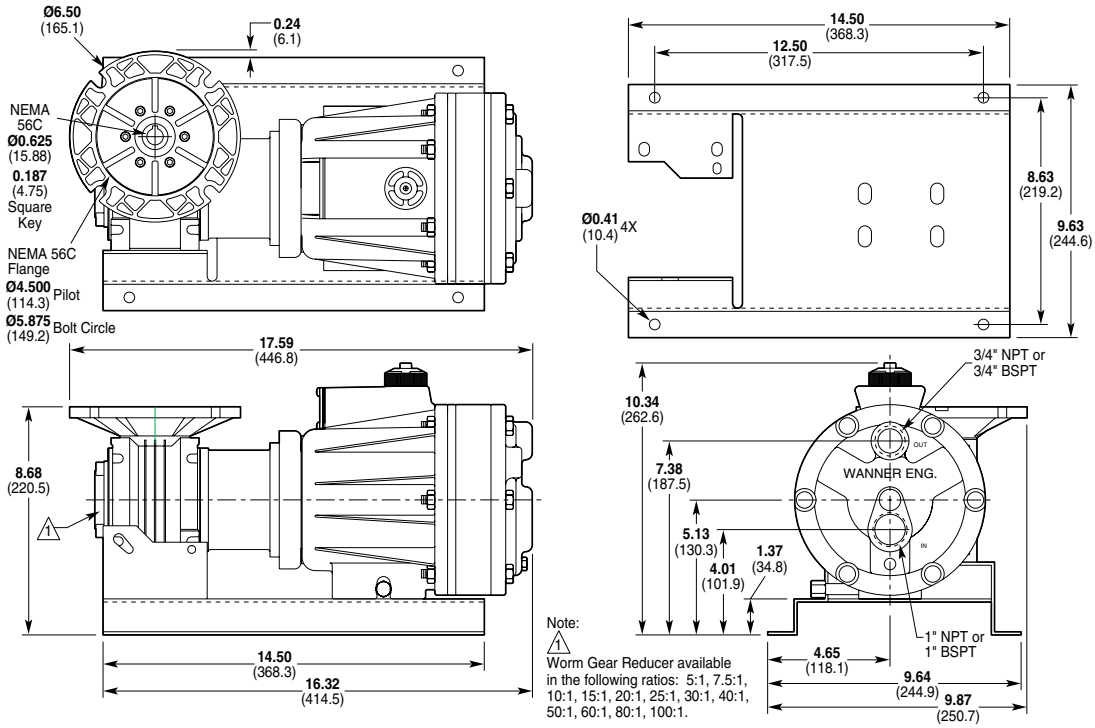

Models with Non-Metallic Pump Head

Kynar
Polypropylene

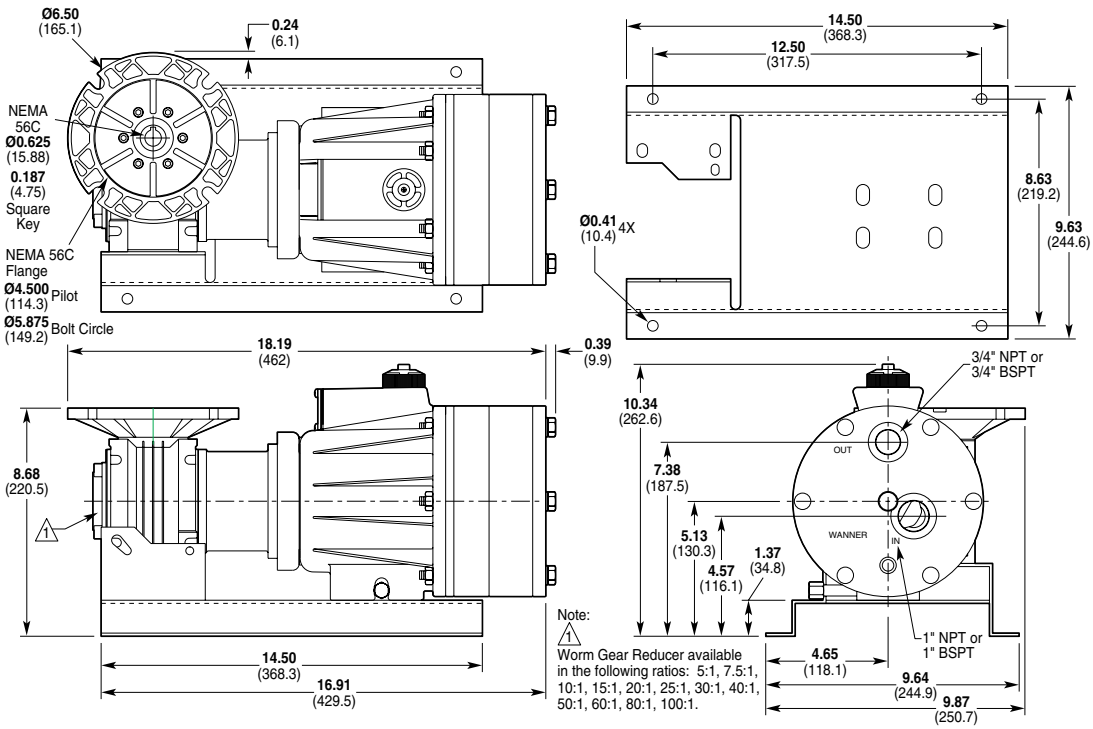

For more information, visit our Website at: www.epmpump.com